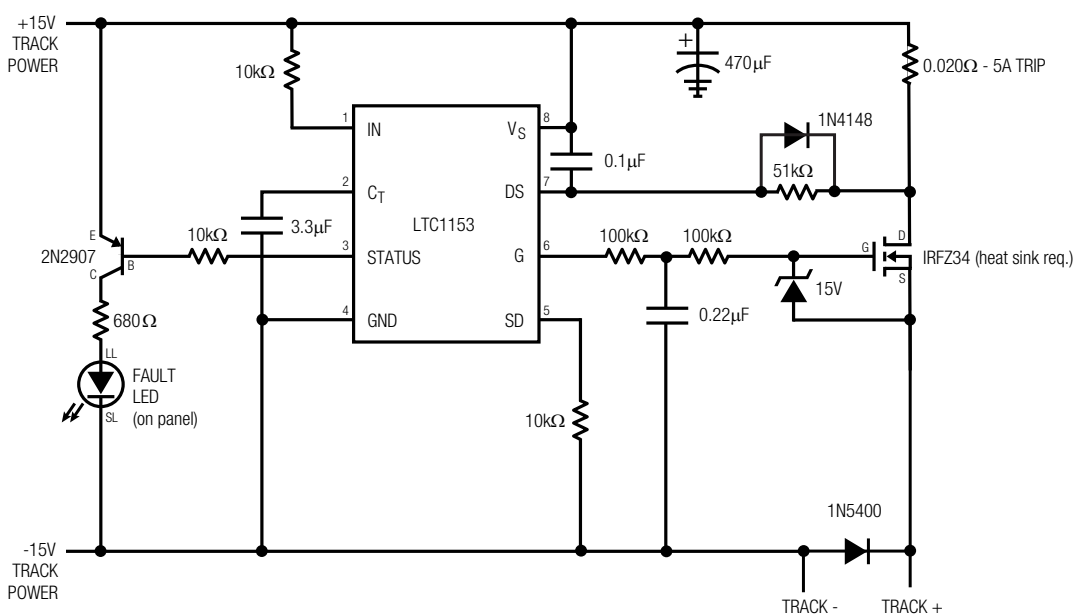

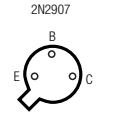

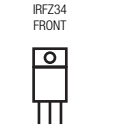

2.54mm lead spacing
1mm drill

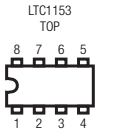

2.54mm lead spacing
7.62mm DIP spacing
0.5mm drill